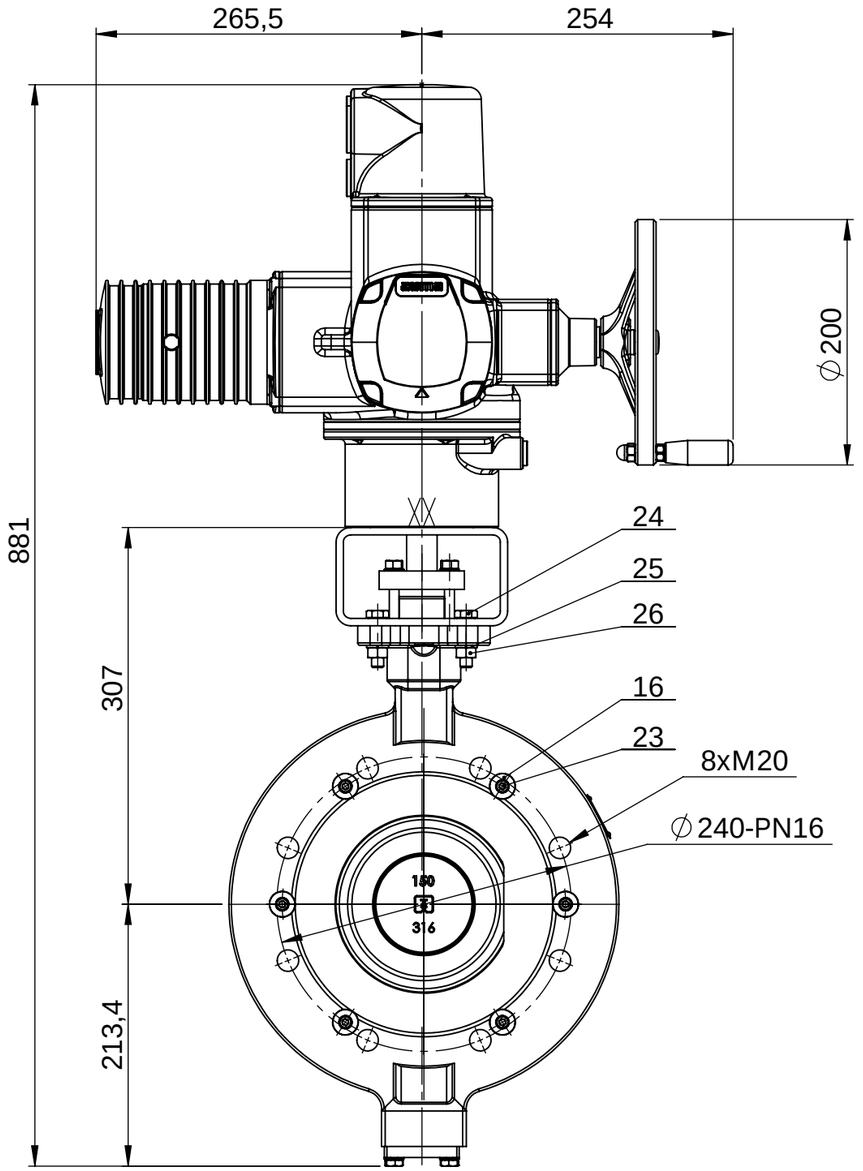

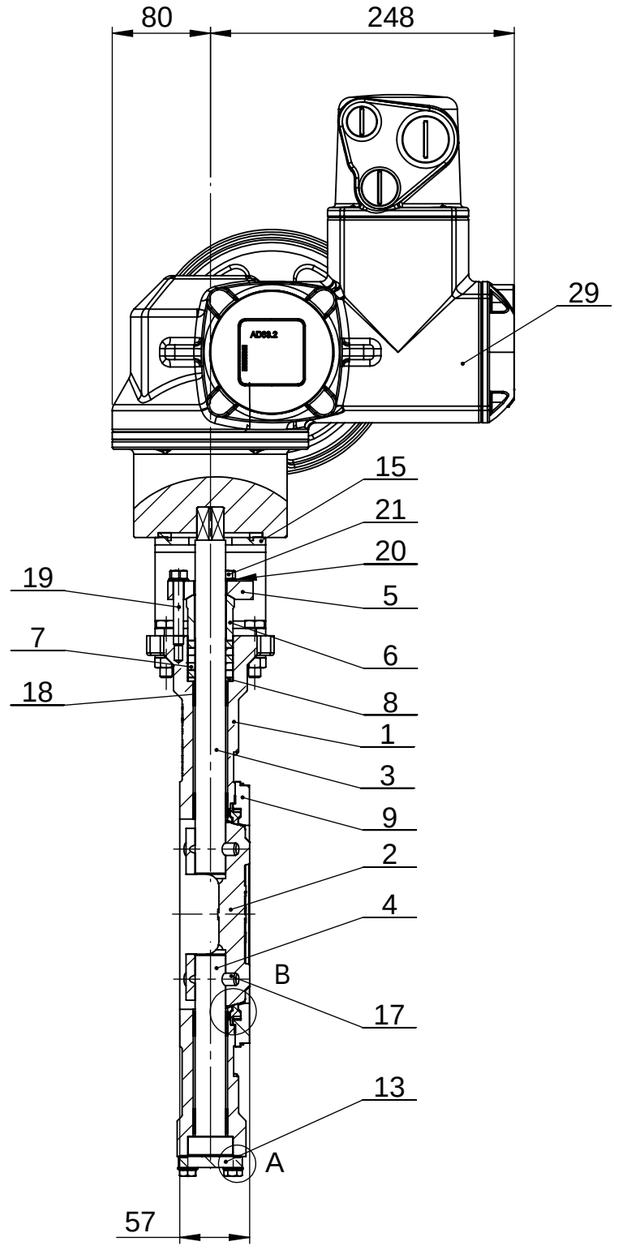

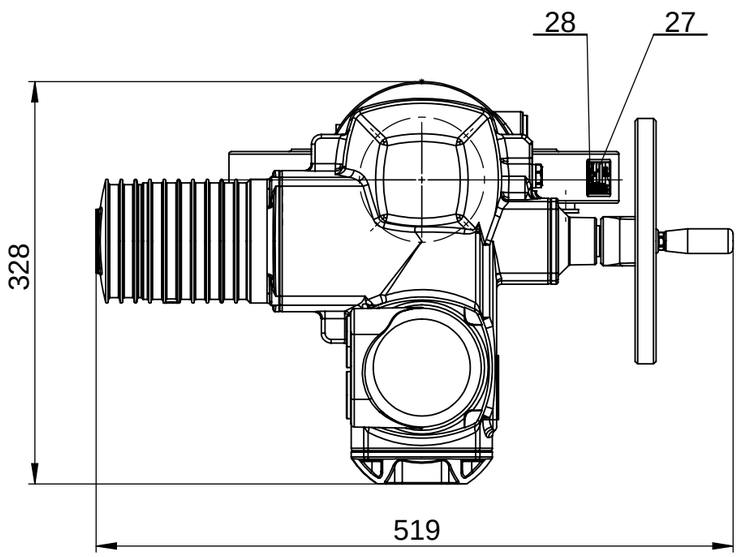

DETAIL B
MÕşÇTKO 2 : 3

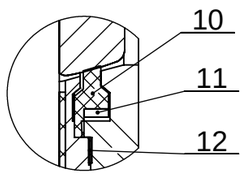

DETAIL A
MÕşÇTKO 2 : 3

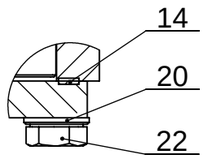

Item	Part list	Note	Material	Wei.	Qt.
29	AUMA SQ 10.2				1
28	RIVET		STEEL	0.021	2
27	NAME PLATE		1.4301	0.01	1
26	HEX NUT		A4	0.011	4
25	WASHER		A4	0.002	4
24	BOLT		A4	0.0361	4
23	BOLT		A4	0.005	6
22	BOLT		A4	0.01	4
21	HEX NUT		A4	0.006	3
20	WASHER		A4	0.002	7
19	STUD		A4	0.02	3
18	BUSHING		TP IGUS	0.00	4
17	PIN		1.4021	0.03	2
16	RETAINING SLEEVE		1.4301 (304)	0.01	6
15	BRACKET		1.0553	1.29	1
14	COVER SEAL		Graphite 98%	0.00	1
13	COVER		1.0553	0.20	1
12	FLANGE SEAL		Graphite	0.01	1
11	BANDAGE		1.4404	0.05	1
10	SEAT		PTFE+25% glass	0.09	1
9	RING FLANGE		1.0553	1.55	1
8	WASHER		1.4404	0.01	1
7	PACKING		Graphite	0.01	5
6	PACKING GLAND		1.4401	0.16	1
5	GLAND FLANGE		1.4301	0.34	1
4	PIVOT		1.4021	0.67	1
3	SHAFT		1.4021	1.09	1
2	DISC		1.4021	3.26	1
1	BODY-T		1.0625	20.57	1

THIS DOCUMENT IS INTELLECTUAL PROPERTY OF ABO CORPORATION.
THIS DOCUMENT MAY NOT BE COPIED OR OTHERWISE DISTRIBUTED WITHOUT PRIOR WRITTEN CONSENT FROM ABO.

Dimension
Material **Weight** 38.43
Card **Note**
Type s.2E5 **Diameter Number** DN150

Drawn Bartonõk Tolerance grade
Checked
Technologist Scale **1:5** Format **A3**
Date 8.10.2018 *Sheet* 1 *Sheets* 1
Status

Title
BUTTERFLY VALVE L32.7/5590T

Drawing Number **Ind.**
5590T15005 A